Engineering Release Order NUMB	Logistics	Change description Change Order NUMBER	P/A: . Modified: D: 2 . 2 Modified: NO	Document release status RELEASED
				Date / Modification count

- (A) WATER FILLER CAP, FRESH WATER
- (B) OIL FILLER CAP, ENGINE
- (C) OIL DIP STICK, ENGINE LEFT OR RIGHT SIDE MOUNTED
- (D) ECU CONTROL UNIT
- (E) OIL DRAIN (WITH PIPE), ENGINE Ø12.5
- (F) OIL FILTER MAIN
- (G) OIL FILTER BYPASS
- (H) LIFTING EYE
- (I) WATER DRAIN, FRESH WATER
- (J) WATER DRAIN, SEA WATER
- (K) AIR FILTER
- (L) FUEL FILTER
- (M) HOT WATER OUTLET Ø16
- (N) HOT WATER INLET Ø16
- (P) STRAINER SEA WATER
- (Q) OIL DIP STICK DRIVE (UNDER COVER)
- (R) CENTRE OF GRAVITY ENGINE AND TRANSMISSION
- (S) WATER INLET DRIVE
- (T) OIL DRAIN DRIVE (BEHIND ADAPTER)
- (U) FUEL INLET CONNECTION Ø10
- (V) FUEL RETURN TO TANK Ø10
- (X) ENGINE STOP
- (Y) CRANK CASE VENTILATION
- (Z) EXHAUST RISER Ø127 (5")(OPTION)
- (AA) X-MEASUREMENT SEE 7742299-6
- (AB) TIE BAR (TWIN INSTALLATION)
- (AC) EXTRA ALTERNATOR (OPTION) POWER STEERING PUMP (OPTION)
- (AD) SEA WATER PUMP
- (AE) DIAGNOSE CONNECTOR
- (AF) ELASTIC SUSPENSION (2x)
- (AG) DATALINK, SENDER AND AUX (2x)
- (AH) POWER SUPPLY, POWER TRIM PUMP
- (AI) ANODE

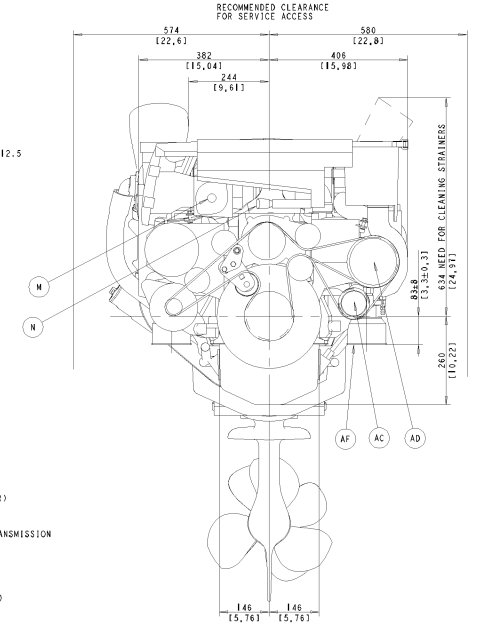

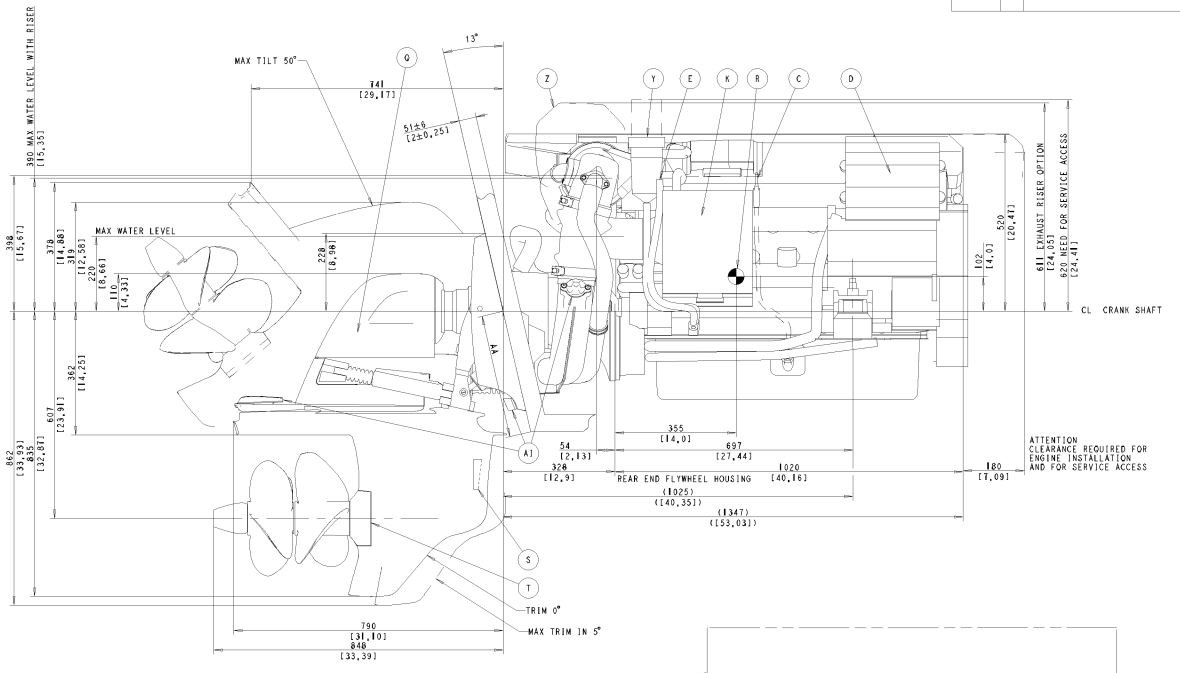

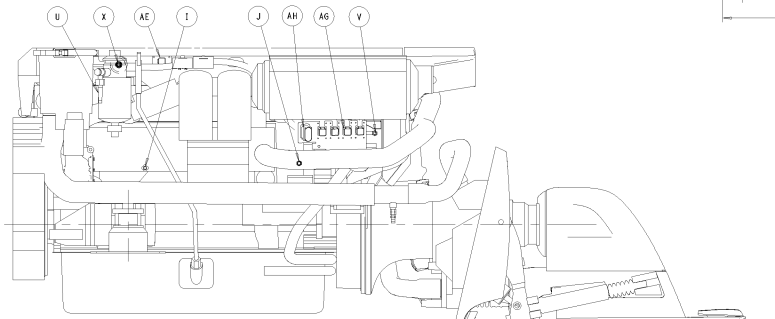

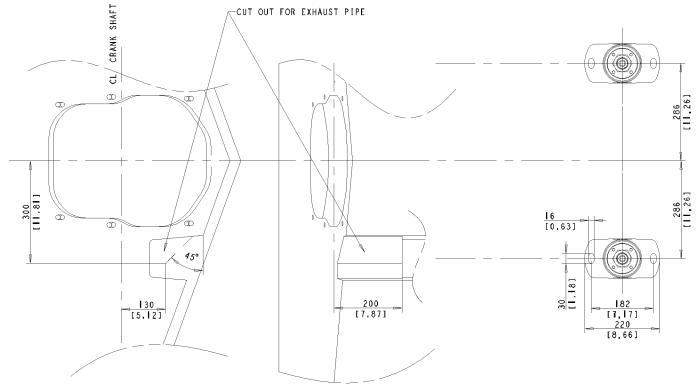

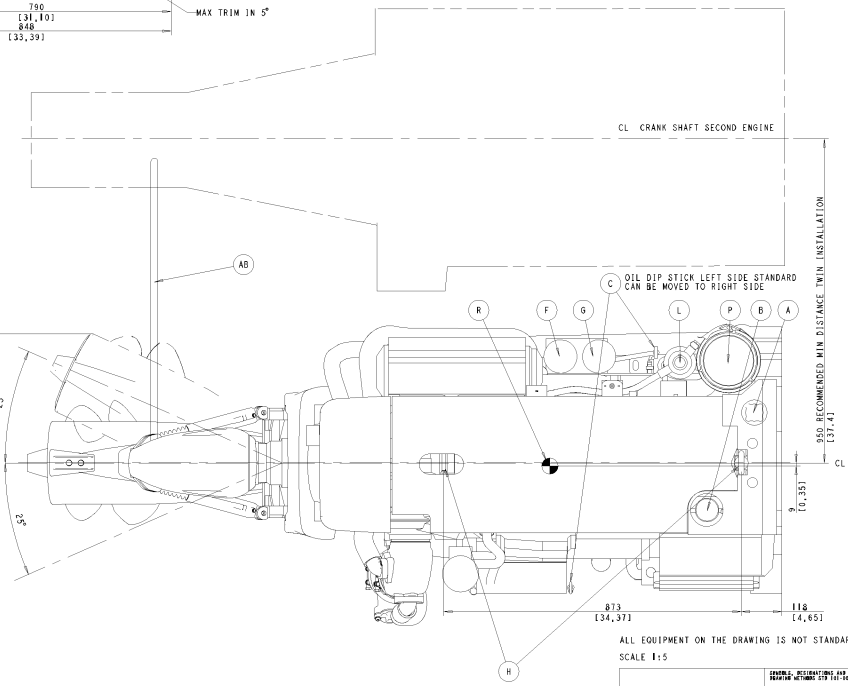

ALL EQUIPMENT ON THE DRAWING IS NOT STANDARD

SCALE 1:5

GENERAL DESIGNATIONS AND GENERAL TOLERANCE ACCORDING STD 001-0005

The reproduce, distribution and utilization of this document as well as the communication of its contents to others without expressed authorization is prohibited. Offenders will be held liable for the payment of damages. All rights reserved in the event of the grant of a patent, utility model or ornamental design registration.

VOLVO PENTA

Document title: ENGINE DIMENSIONS D6 400 AQ-DRIVE DPH

Document type: DIMENSION DRAWING

Sheet description: Sheet description profile

Document number	Layer value	Sheet no
21912447	02	1