Engineering Release Date/Time D-14005-07	Location SEE EDN	Change description P/A: . . . D . 3 . 7 . main	Document status status RELEASED	
			Date 09-04-14	Modification sheet

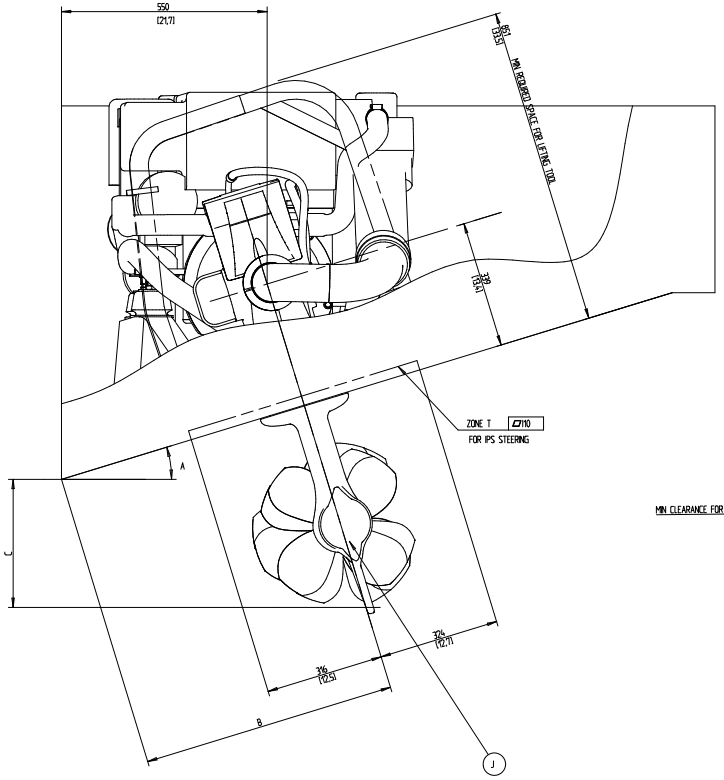

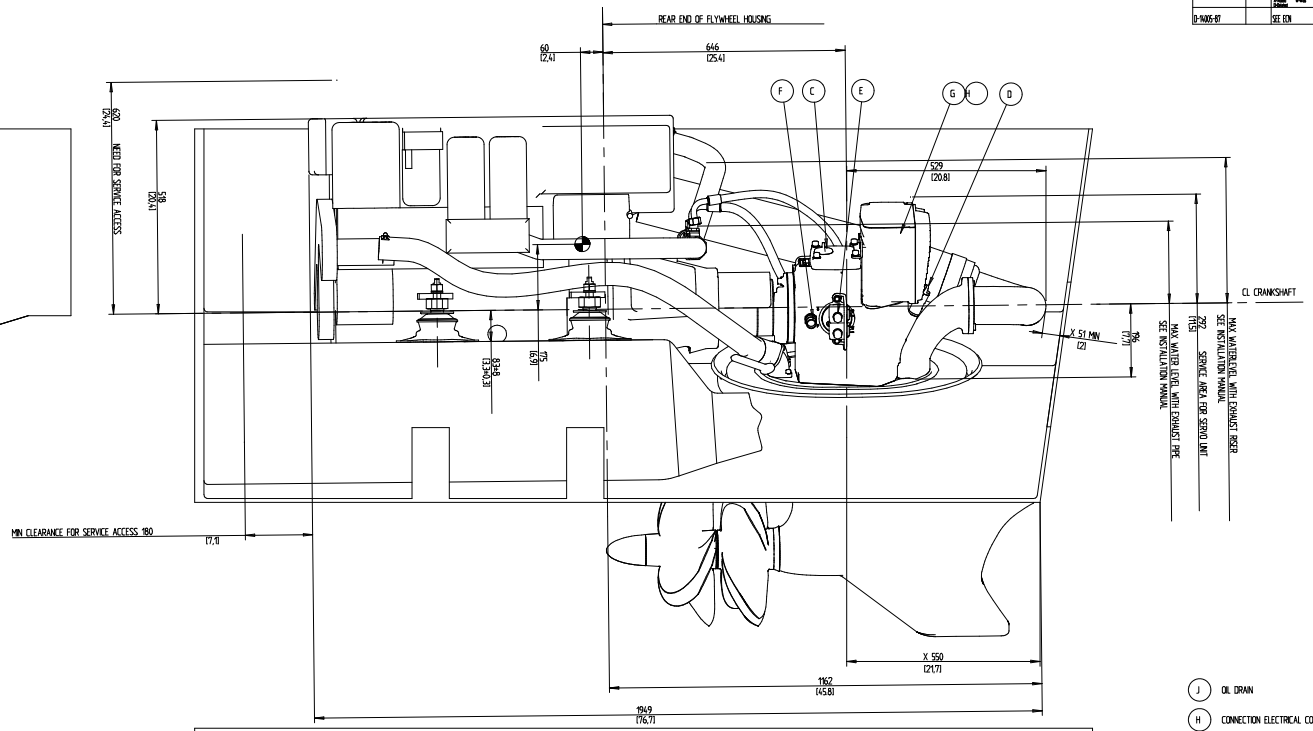

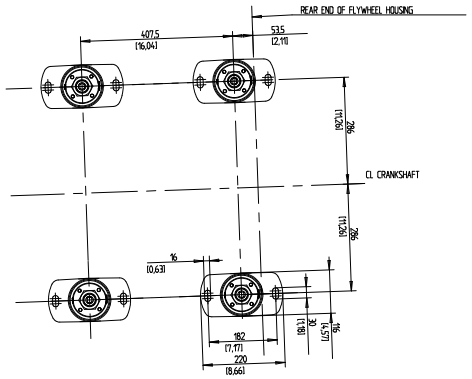

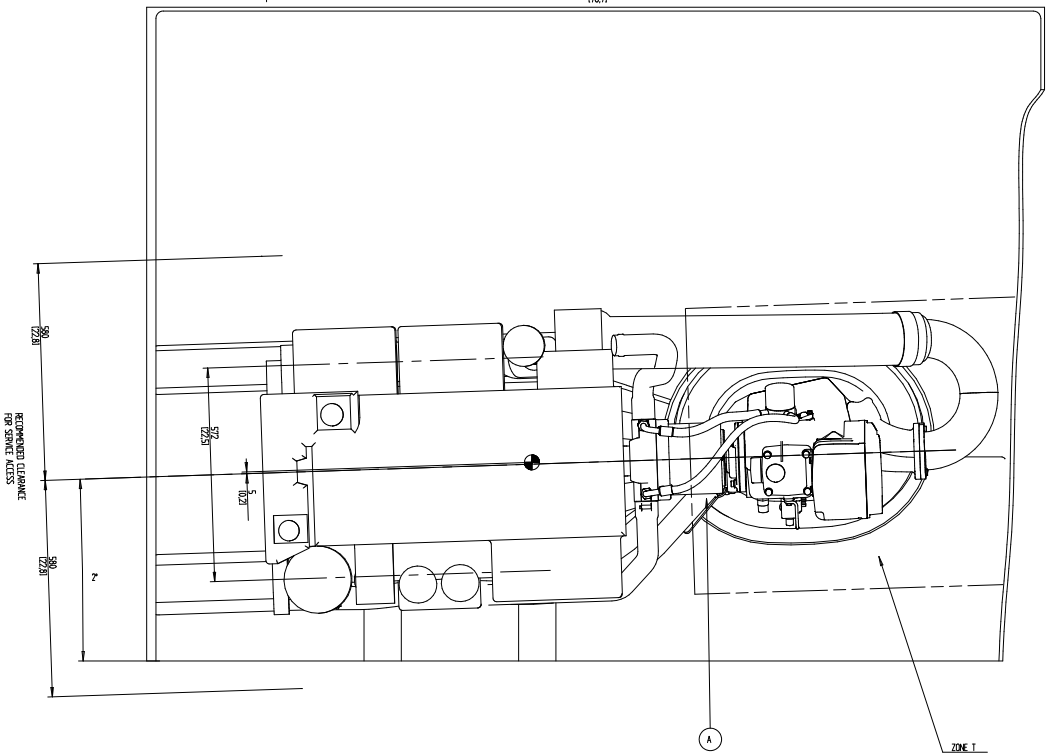

- (J) OIL DRAIN
- (H) CONNECTION ELECTRICAL CONTROL
- (G) CONNECTION BATTERI POS. AND NEG.
- (F) CONNECTION OIL TEMP./PREASSURE
- (E) CONNECTION, SHIFT SOLENOIDES
- (D) OIL DIPSTICK GEAR BOX
- (C) OIL FILLER GEAR BOX
- (A) SEA WATER INLET

CENTER OF GRAVITY

ENGINE RELATED ITEMS SEE DWG. 3591349

WEIGHT ENGINE AND GEARBOX 747 kg (WITHOUT OIL AND WATER)

A°	B	C
5	582	532
6	589	521
7	596	508
8	603	496
9	611	483
10	618	469
11	626	455
12	635	441
13	643	426
14	652	410
15	661	395
16	670	378
17	679	362
18	689	344
19	699	326
20	709	308
21	720	289
22	731	270
23	742	250
24	753	229

SCALE 15

The copying, distribution and utilization of this document as well as the communication of its contents to others without express authorization is prohibited. Offenders are liable to the payment of damages. All rights reserved in the event of the grant of a patent, utility model or ornamental design registration.

VOLVO PENTA

SYMBOLS, DESIGNATIONS AND GENERAL DRAWING METHODS SIS 161-0005 ISO 5455 5625500

Document title: ENGINE INSTALLATION IPS WITH D4

Document type: INSTALLATION DRAWING

Document No: 3591598 | Sheet title: 03 | Sheet No: 1/1