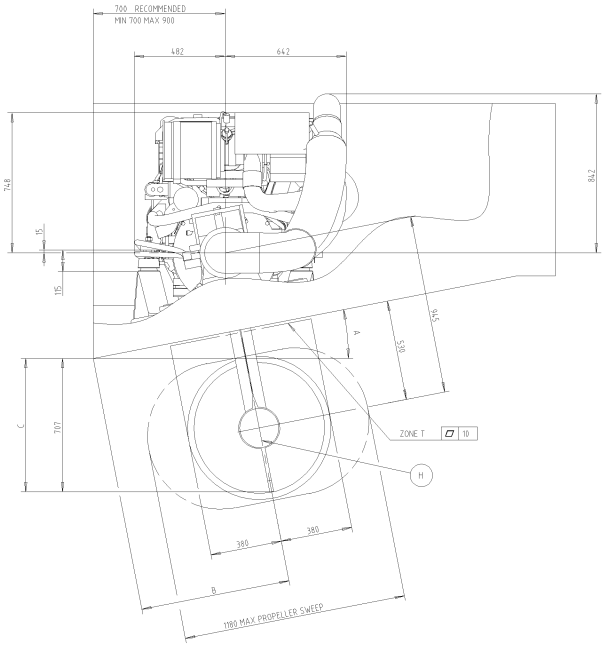

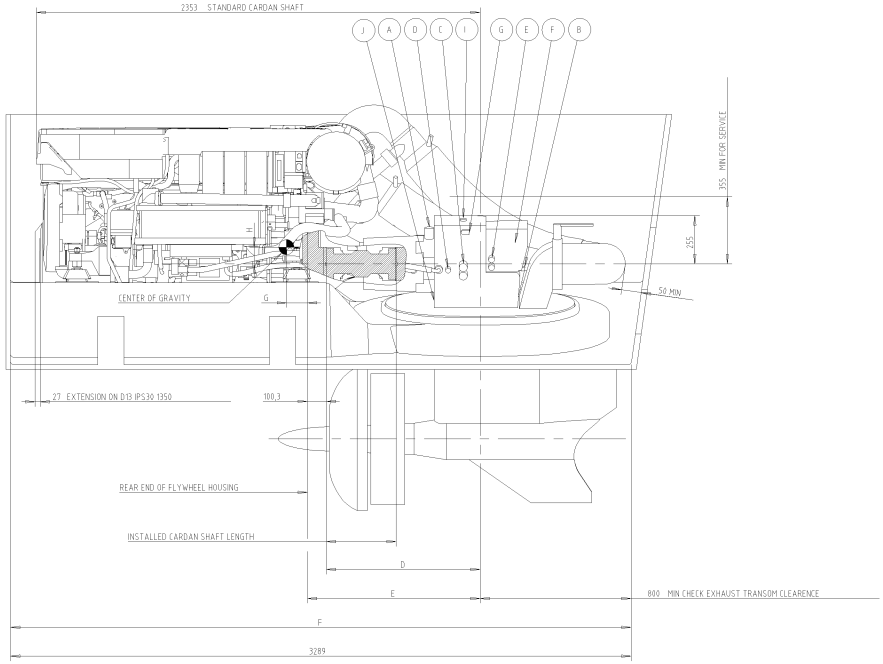

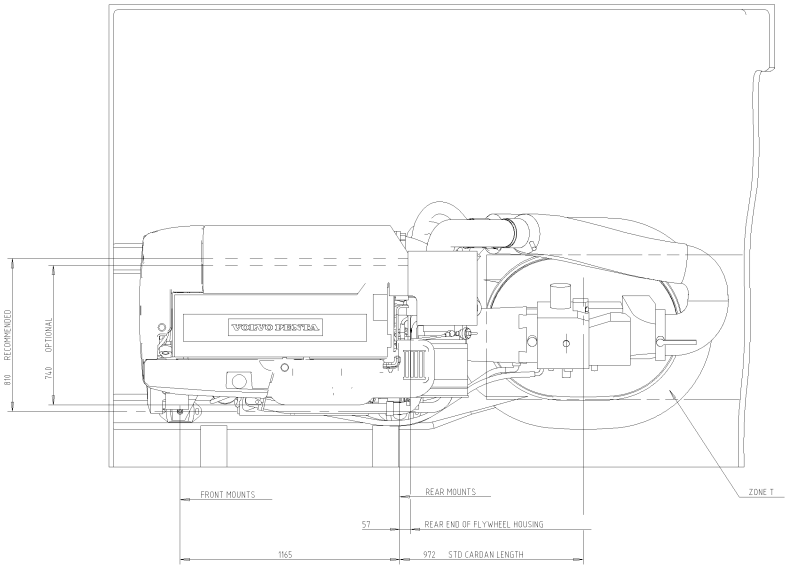

CLEARANCE IPS TO HULL

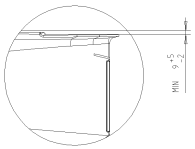

CARDAN LENGTH	D	E	F	G	H	TOTAL WEIGHT
STD 370 ±15mm	816 ±15	916 ±15	3289 ±15	210	28	2450 KG
700-800mm	1146-1246	1246-1346	3619-3719	125	27	2460 KG
1100-1200mm	1546-1646	1646-1746	4019-4119	8	25	2470 KG
1500-1600mm	1946-2046	2046-2146	4419-4519	-97	25	2480 KG
1900-2000mm	2346-2446	2446-2546	4819-4919	-230	25	2500 KG
2400-2500mm	2846-2946	2946-3046	5319-5419	-417	19	2510 KG

A°	B	C
7	756	776
8	765	760
9	774	743
10	784	726
11	794	708
12	804	689
13	814	670
14	825	650
15	836	629
16	847	608
17	859	587
18	871	564
19	883	541
20	896	515
21	909	493

IPS UNIT

- J — CONNECTION WATER IN OIL SENSOR
- H — OIL DRAIN (2x)
- G — CONNECTION RPM SENDER
- F — CONNECTION ELECTRICAL CONTROL
- E — CONNECTION BATTERI POS. AND NEG.
- D — CONNECTION OIL TEMP./PRESSURE
- C — CONNECTION, SHIFT SOLENOIDES
- B — OIL DIPSTICK GEAR BOX
- A — OIL FILLER GEAR BOX

FOR EASY INSTALLATION, USE ENGINE/IPS BED INSTALLATION TOOL

ENGINE

SEE DIMENSION DRAWING FOR ENGINE

SCALE 1:10

Engineering Release Notice ECN	Location
Change description	Modified
Added Notes Deleted	P/A: Modified
	D: 5 . 6 Modified NO
Document release status	RELEASED
Date	Modification count

The copying, distribution and utilization of this document as well as the communication of its contents to others without express authorization is prohibited. Offenders will be held liable for payment of damages. All rights reserved in the event of the grant of a patent, utility model or ornamental design registration.

VOLVO PENTA

SYMBOLS, DESIGNATIONS AND GENERAL DRAWING METHODS STD 101-0005

Document title: DIMENSION DRAWING IPS 30 WITH D13

Document type: DIMENSION DRAWING

Raised tolerances/Decimal prefix: –

Document No	Issue Index	Sheet No
3591847	05	1 (1)